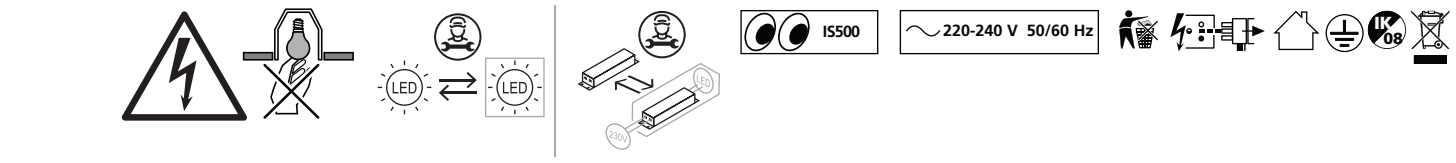

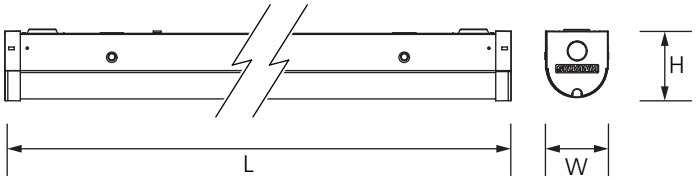

	L	W	H
600	672	70	76.5
1200	1220	70	76.5
1500	1523	70	76.5

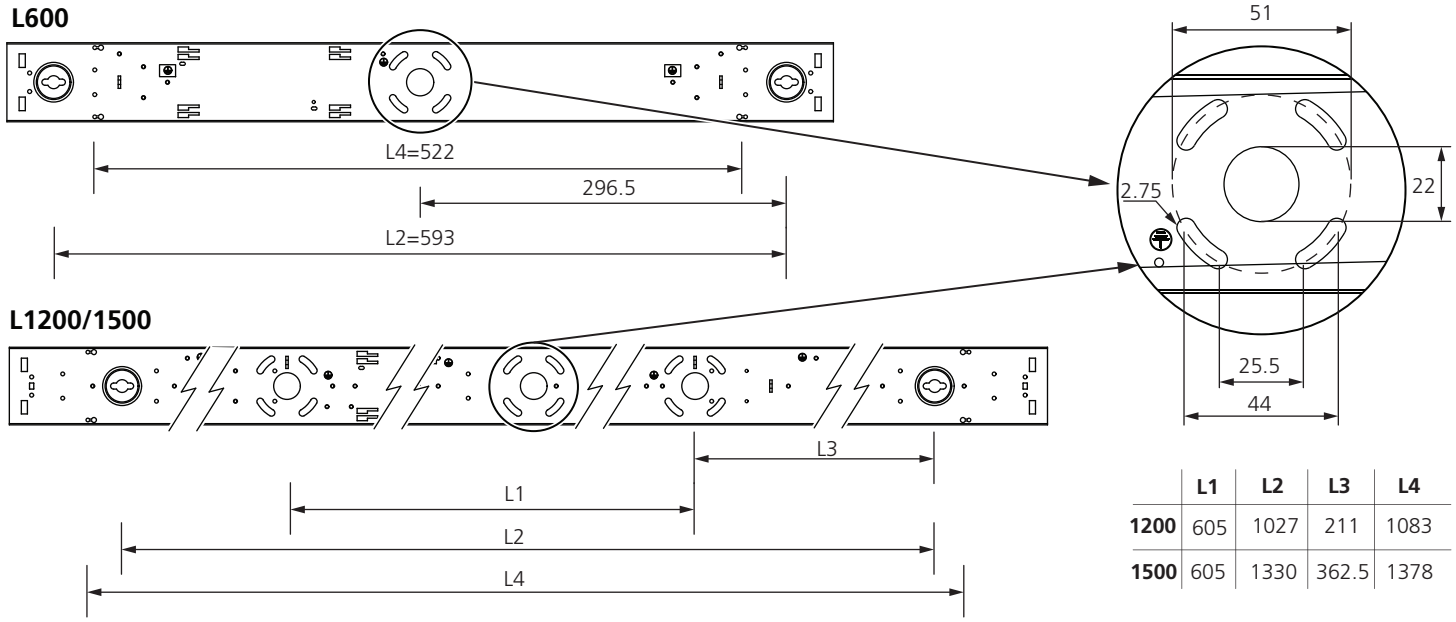

	L1	L2	L3	L4
1200	605	1027	211	1083
1500	605	1330	362.5	1378

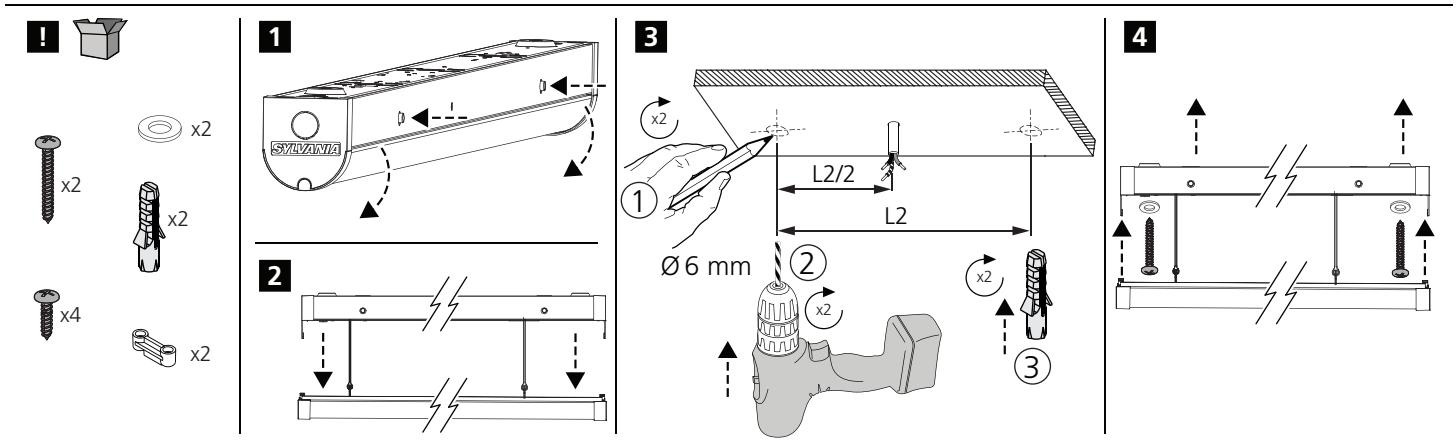

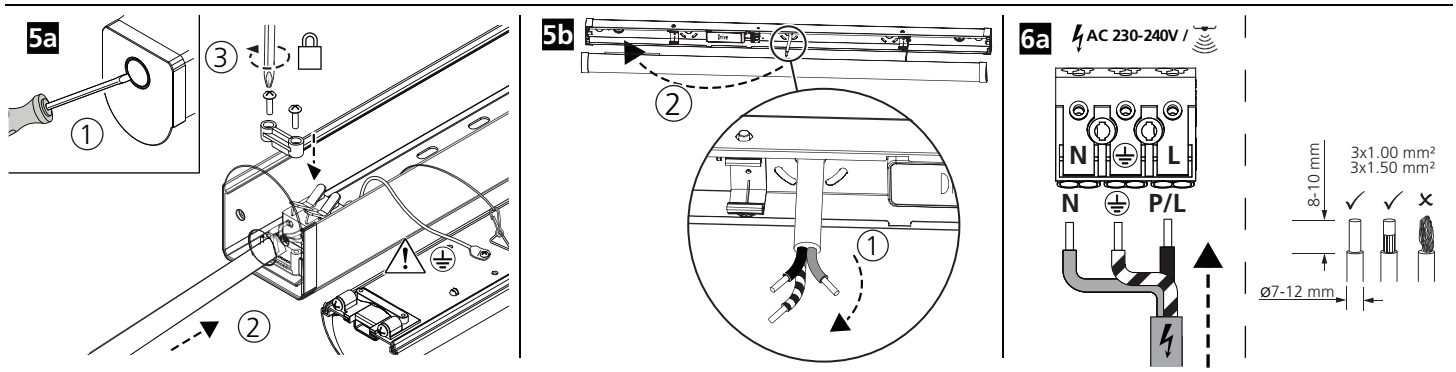

7

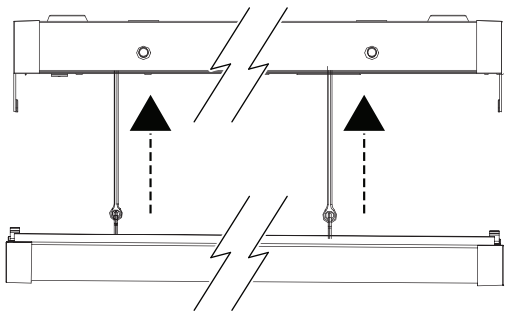

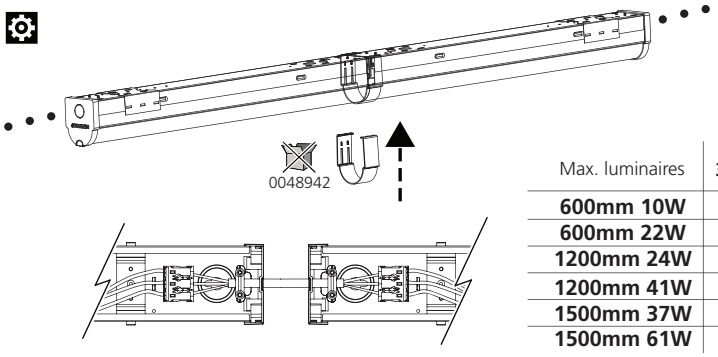

Max. luminaires	3x1.50 mm²
600mm 10W	73
600mm 22W	31
1200mm 24W	28
1200mm 41W	16
1500mm 37W	17
1500mm 61W	11

1

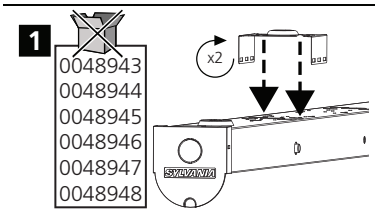

2

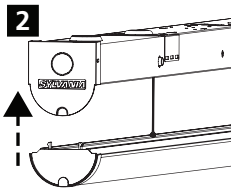

3

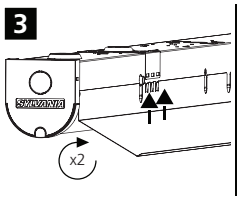

4

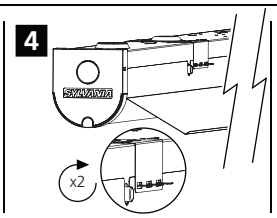

5

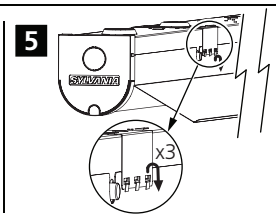

1

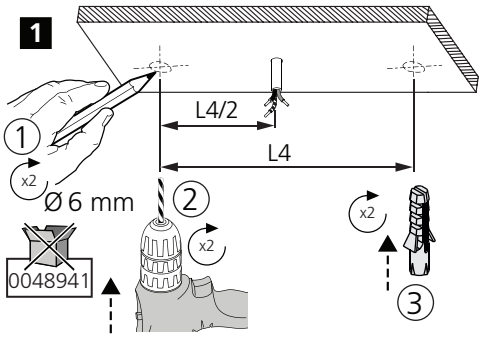

2

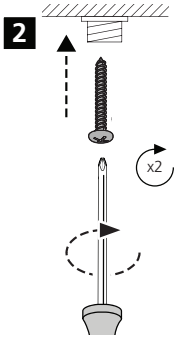

3

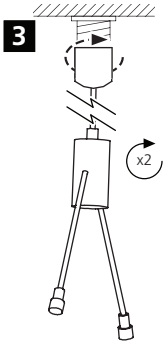

4

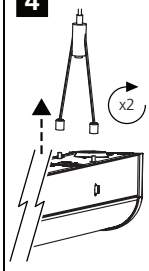

5

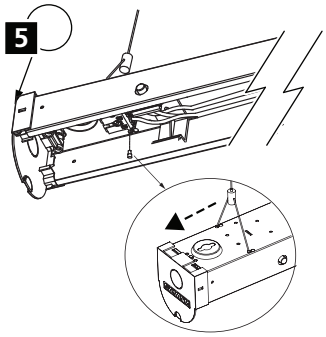

!

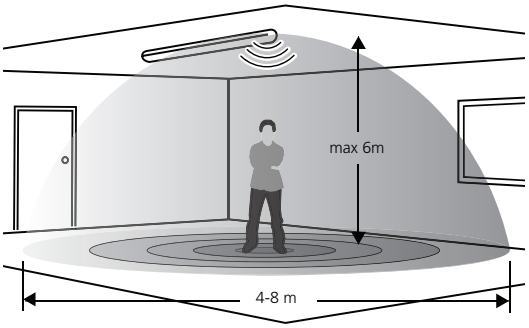

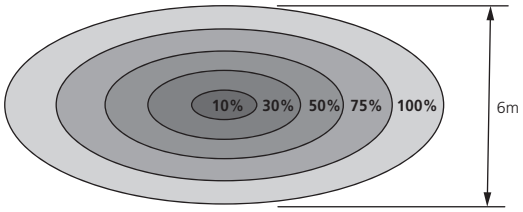

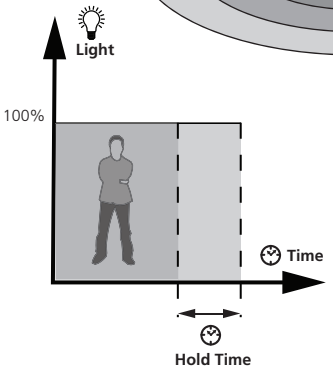

!

Detection Area

	1	2	
I	●	●	100%
II	●	○	75%
III	○	●	50%
IV	○	○	25%

Hold Time

	3	4	
I	●	●	5S
II	●	○	30S
III	○	●	90S
IV	○	○	3min

Daylight Sensor
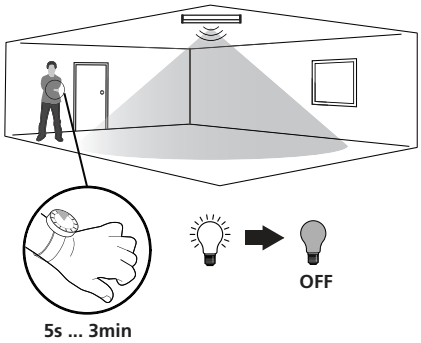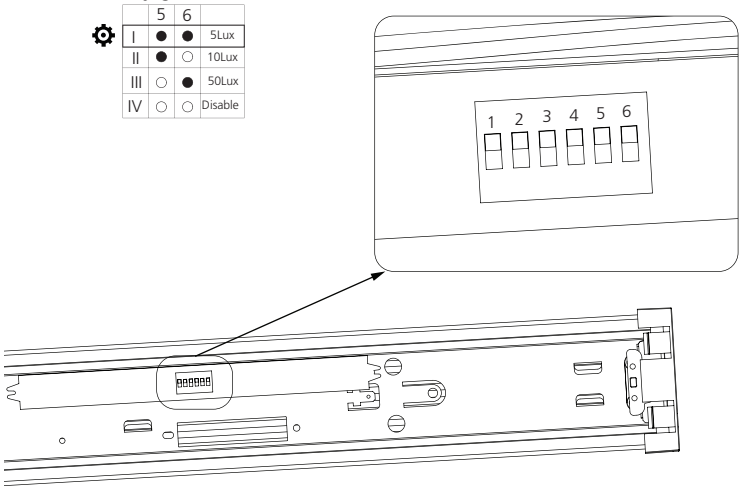
	5	6	
I	●	●	5Lux
II	●	○	10Lux
III	○	●	50Lux
IV	○	○	Disable