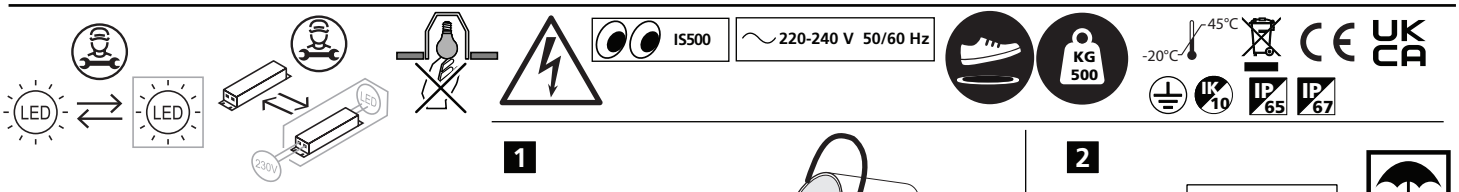


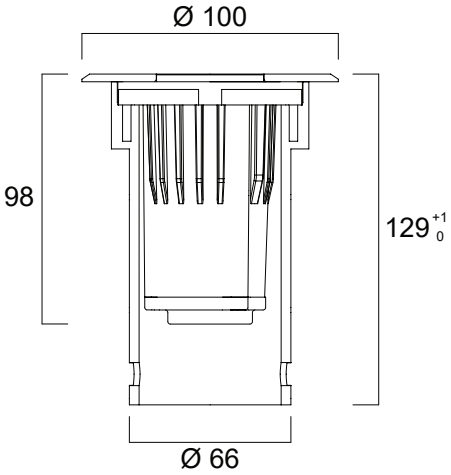


**1**

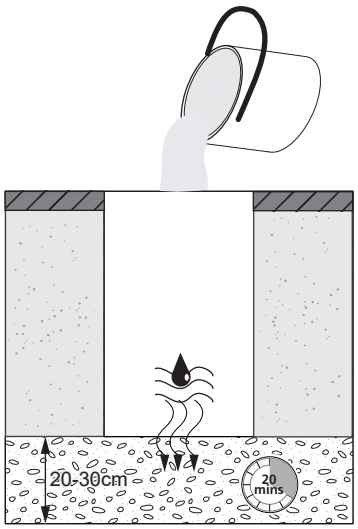


**2**

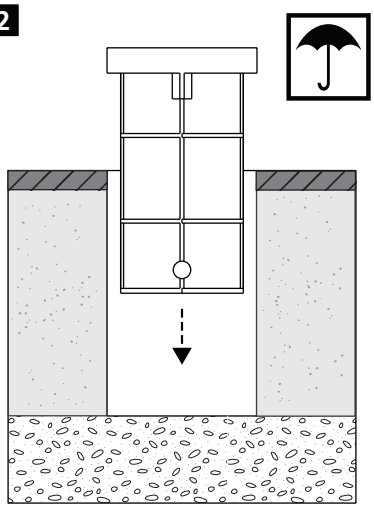

**3**

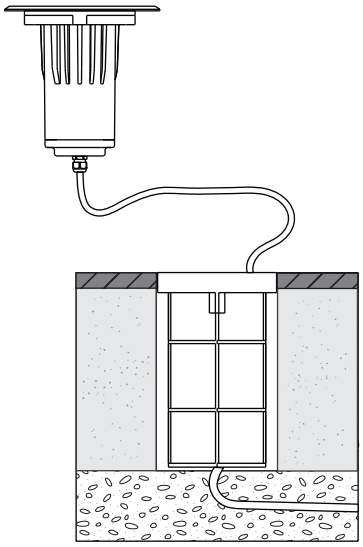

**4** AC 220-240V

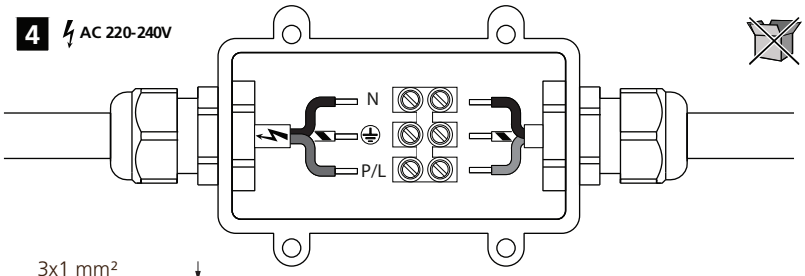


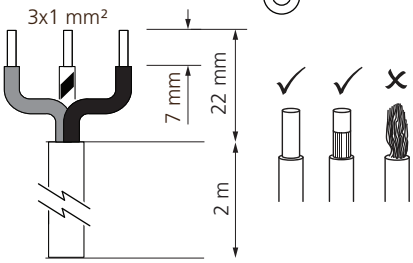


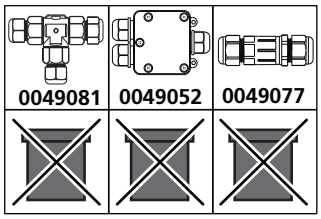


**5**

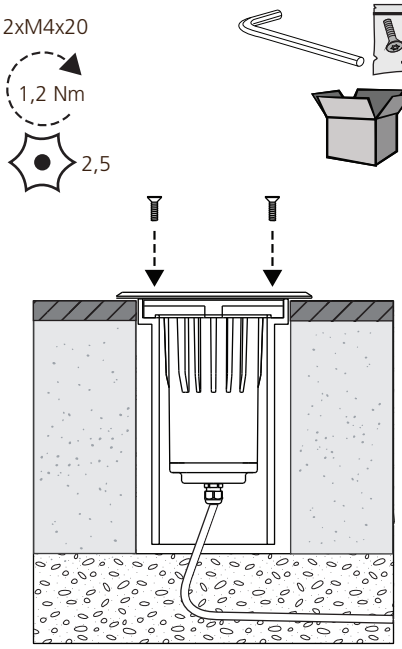


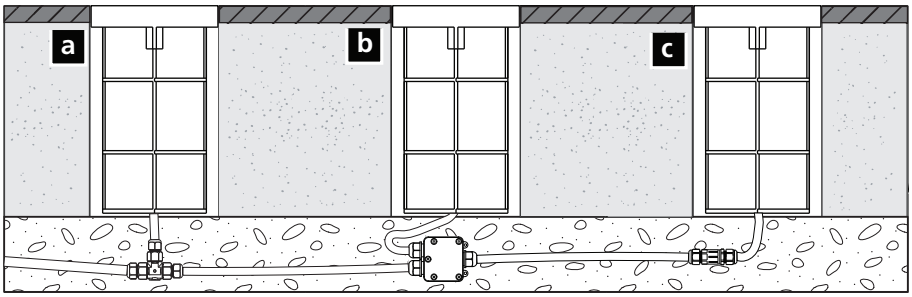


**0049081** **0049052** **0049077**

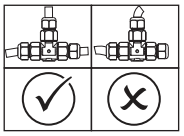

max 10 pcs. or 280 W

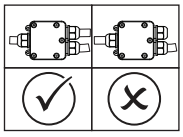

max 10 pcs. or 280 W