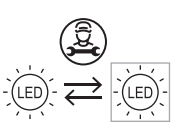

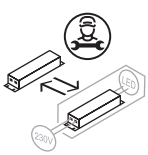

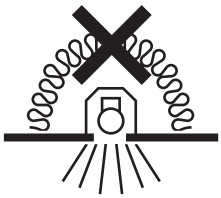

220-240 V 50/60 Hz

IS500

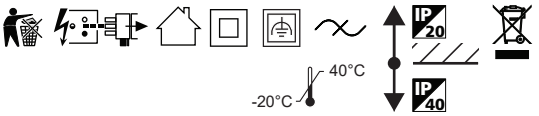

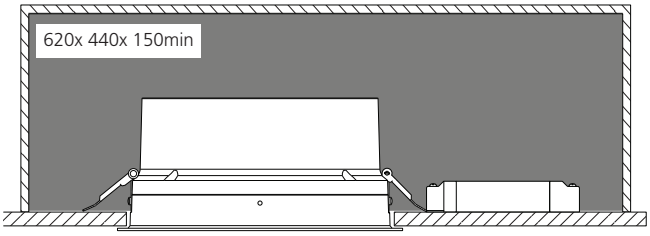

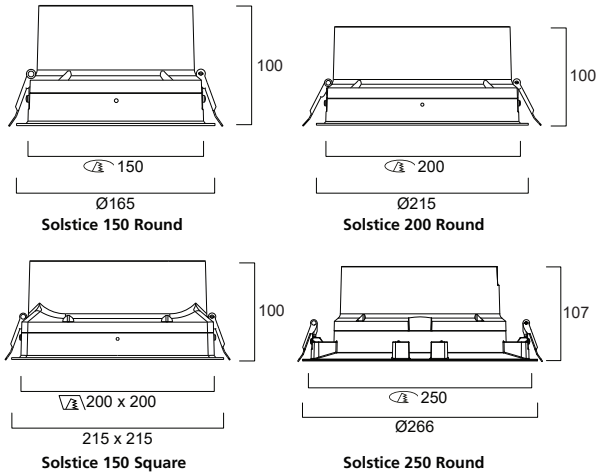

1

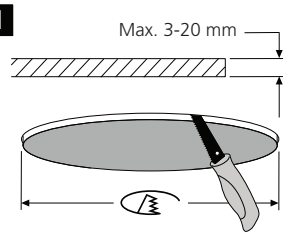

Solstice 150 Round	150mm
Solstice 200 Round	200mm

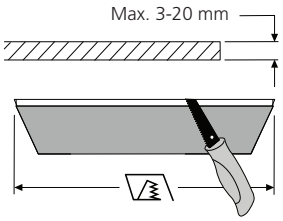

Solstice 200 Square	200 mm

2

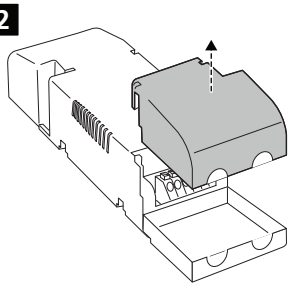

3a 220-240V~ + DALI 0/50/60Hz

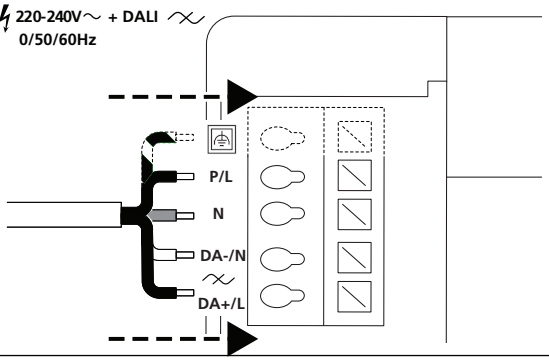

3b 220-240V~ + Switch-Dim 0/50/60Hz

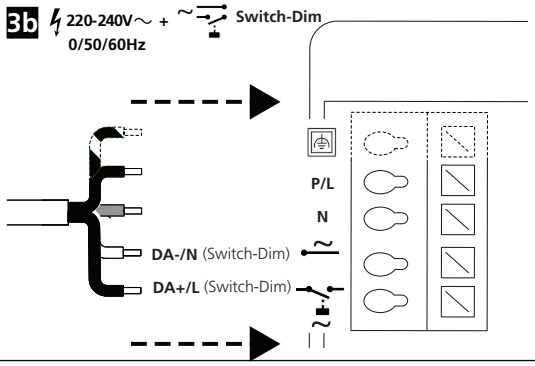

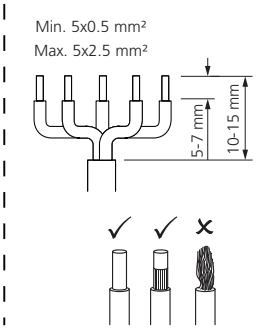

3c 220-240V~ SSA/SSC

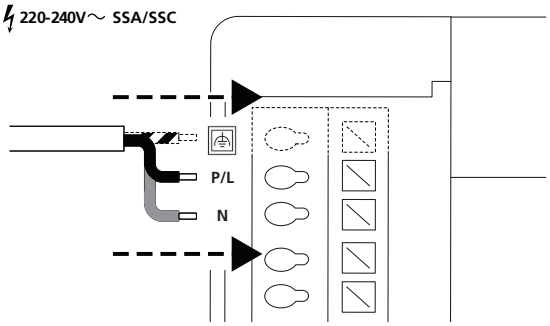

4

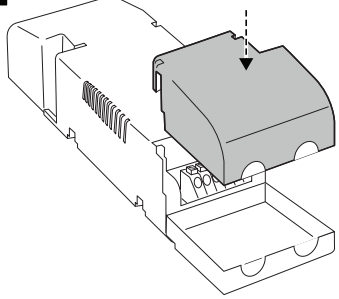

5

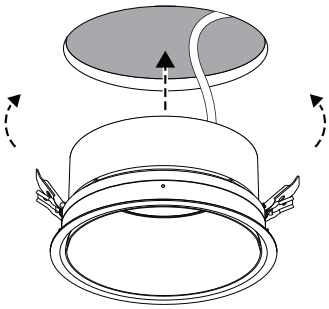
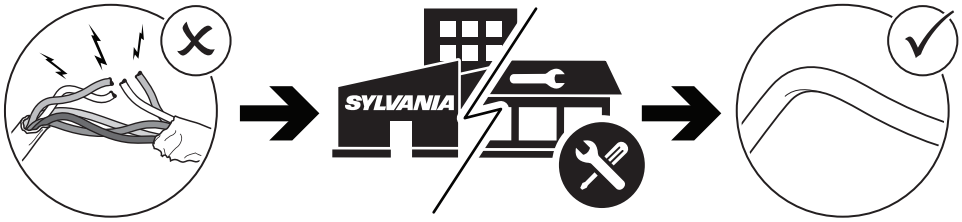
!