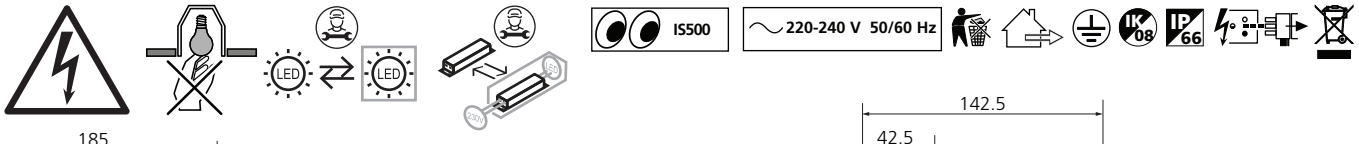
LED
LED
IS500
220-240 V 50/60 Hz
IK 08
IP 66

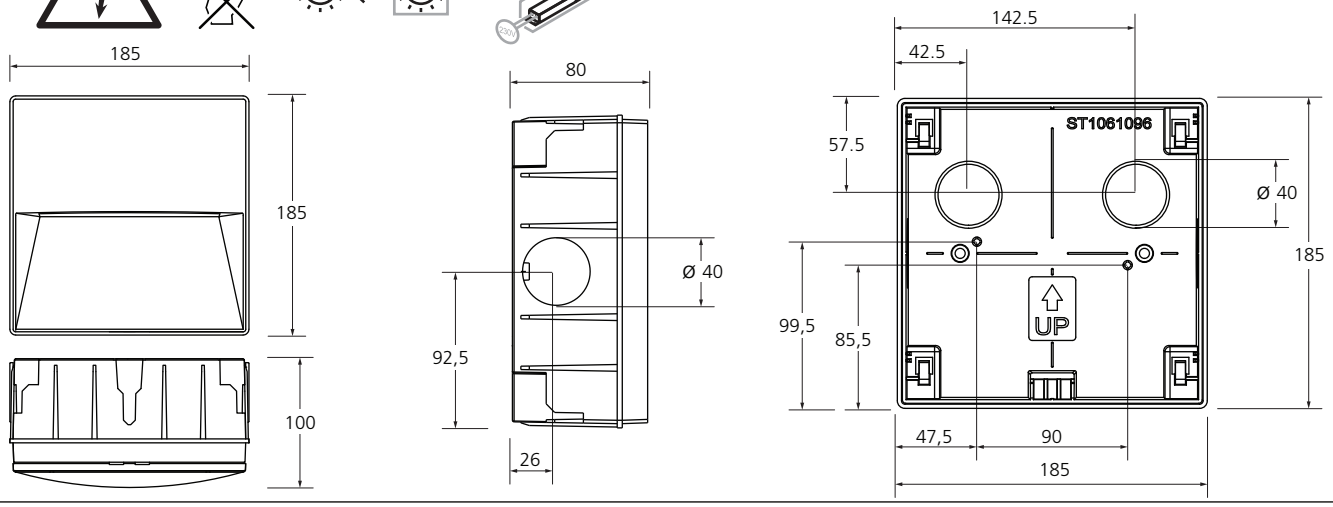
185
185
100
80
Ø 40
92,5
26
142.5
42.5
57.5
ST1061096
Ø 40
185
99,5
85,5
UP
47,5
90
185

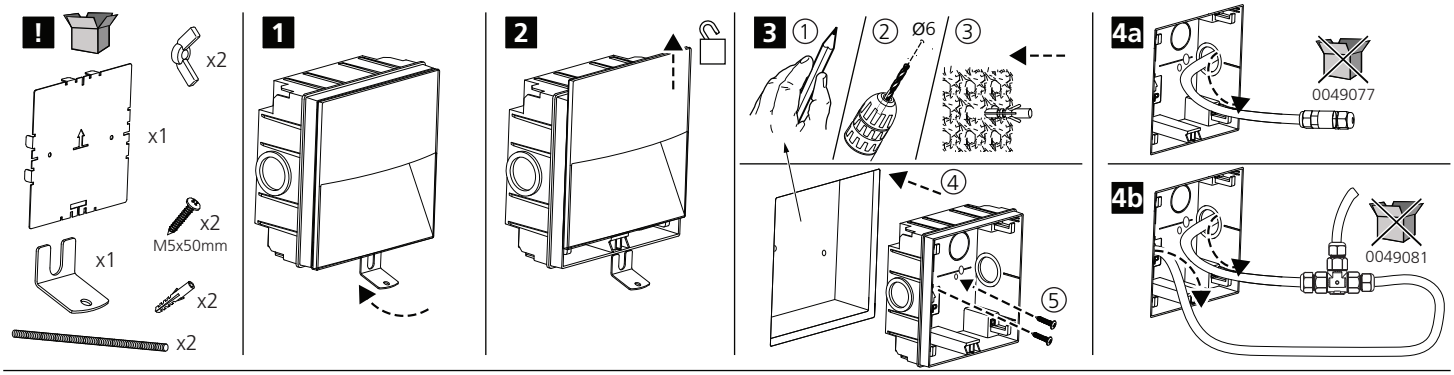
!
x2
x1
x2
M5x50mm
x1
x2
x2
1
2
3
①
②
Ø6
③
④
⑤
4a
0049077
4b
0049081

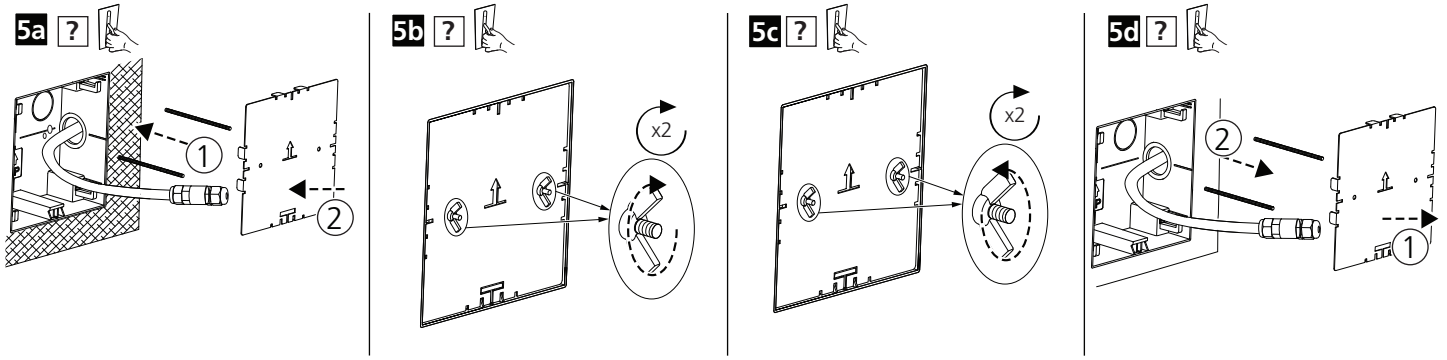
5a ?
①
②
5b ?
x2
5c ?
x2
5d ?
②
①

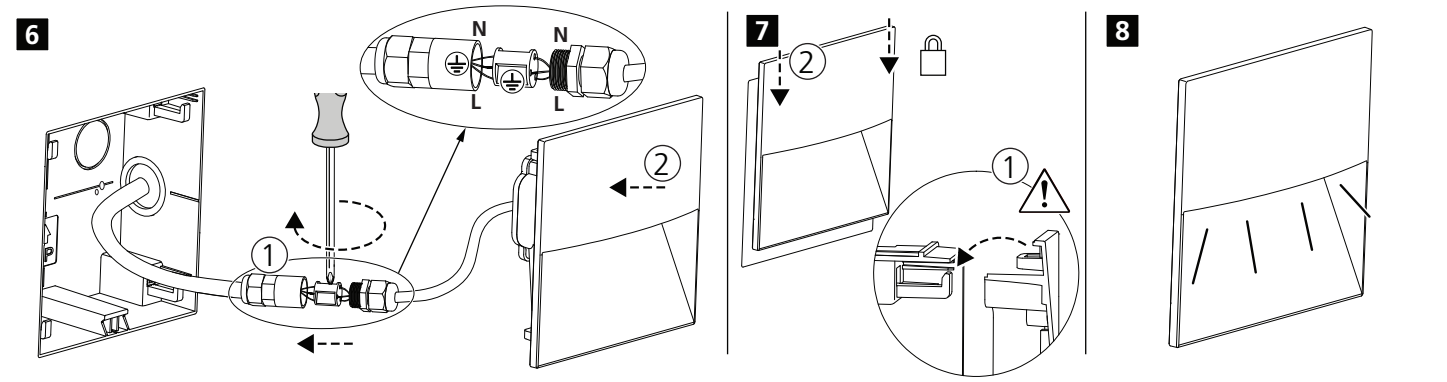
6
N
N
L
L
①
②
7
②
①
8

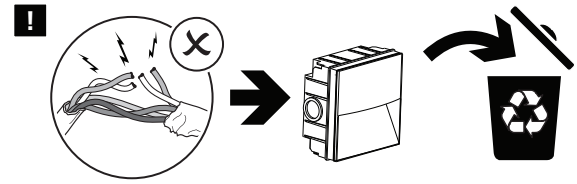
!

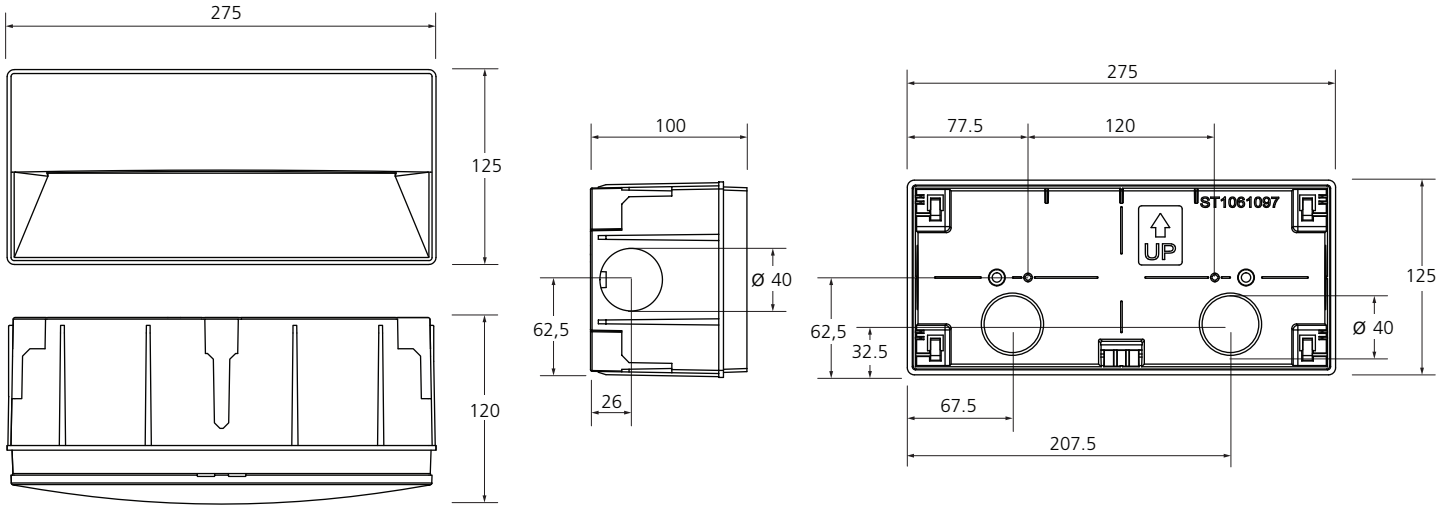

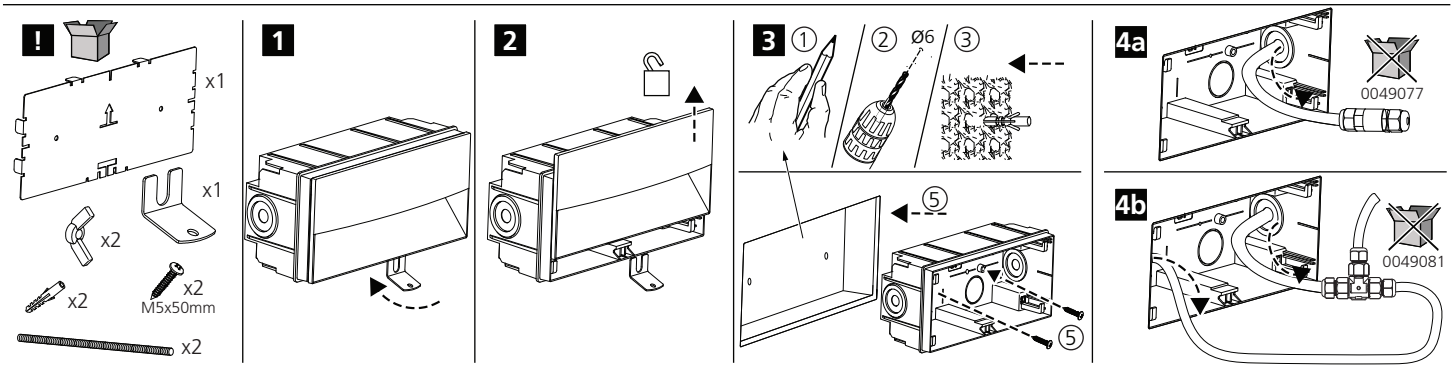

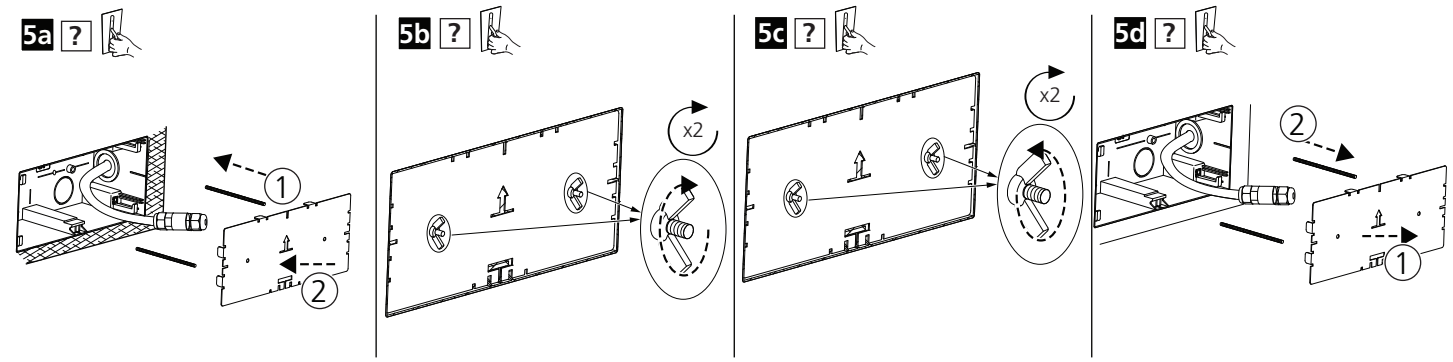

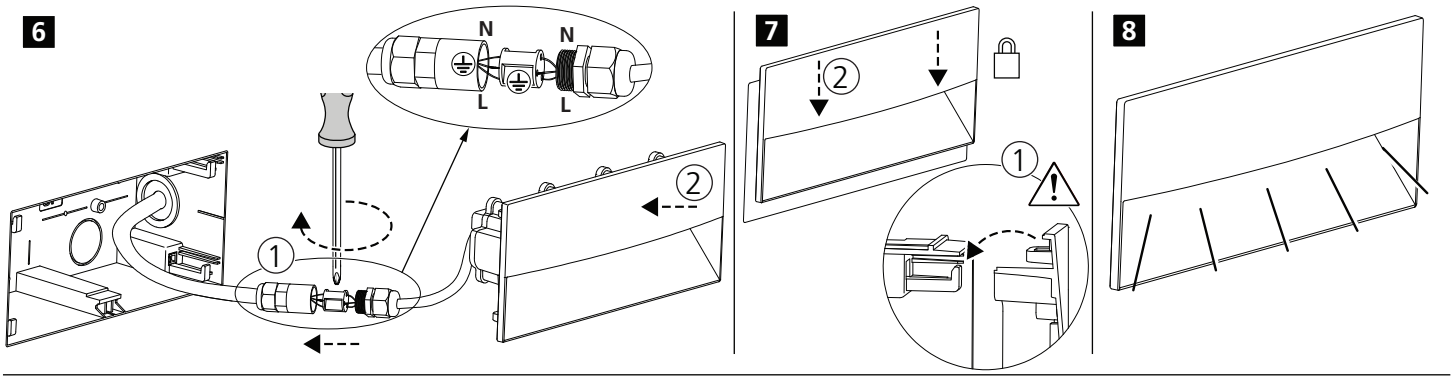

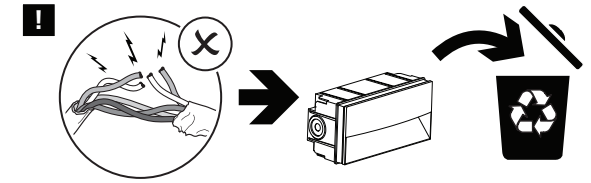

SYLVANIA

04.21